Application Note No. LAN-077e.A1
Version: A1
Author: M. Hohmann
Date: 05.03.2020

History:

Version	Changes	Date	Author
1.0	First edition	13.10.2017	M. Franck
A1	Adjusting the paste printing	05.03.2020	M. Hohmann

Soldering Instruction for the phyCORE®-i.MX 6UL/ULL

Content

1 Introduction 2
2 Delivery Format 3
3 Production Settings 5
3.1 Paste Printing 5
3.2 Placement 6
3.3 Soldering 7

Figures

Figure 1: Top, Bottom and Side View 2
Figure 2: Location of Pin1 3
Figure 3: Tape Dimensions in mm 3
Figure 4: Paste Printing (orange) without Paste Reduction 5
Figure 5: Dimensions of the Module 6
Figure 6: Classification Profile (J-STD-020E, Figure 5-1, Page 8) 8

1 Introduction

	This soldering guide is for the following PCL-063 product boards: • PL1468x • PL1515x

This Application Note provides a guide on how to solder the phyCORE-i.MX 6UL/ULL module.

For a good soldering result, we recommend using the same or similar parameters.

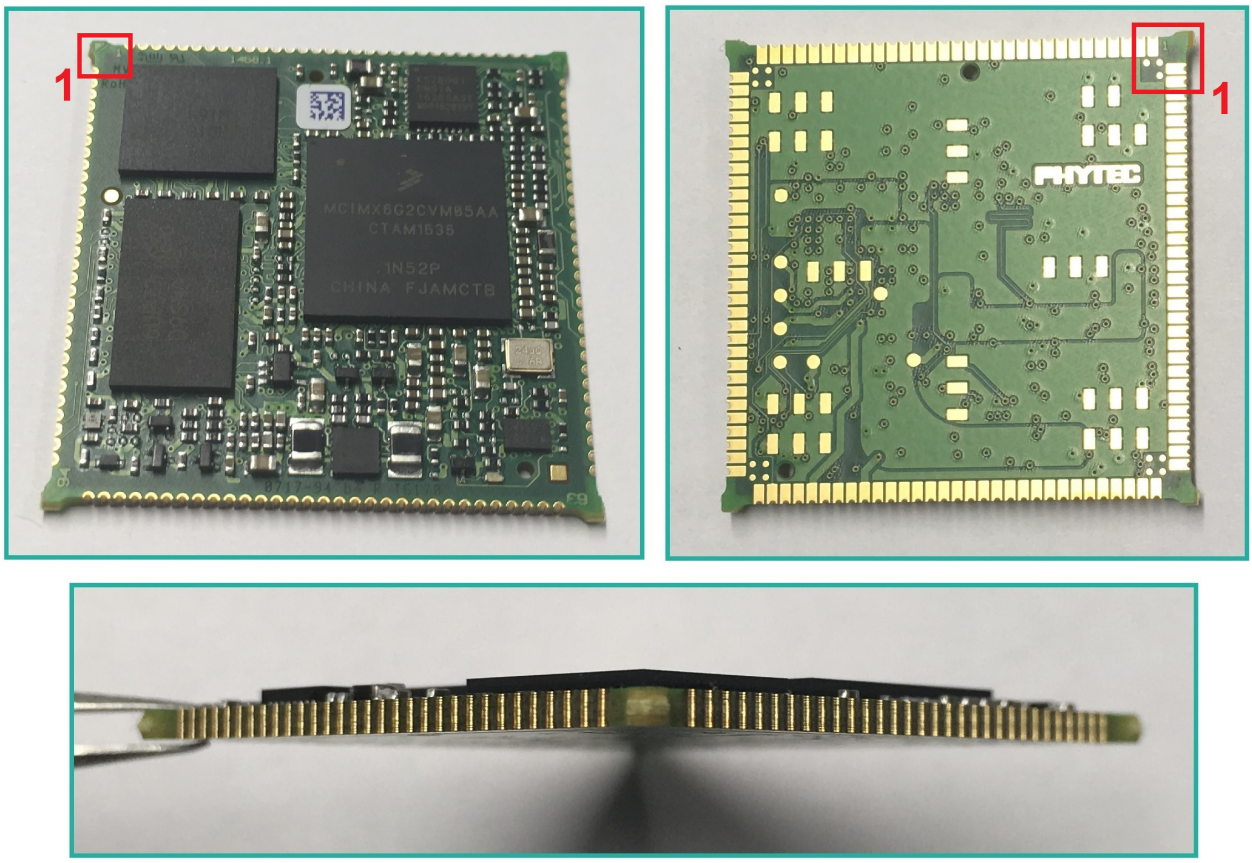

Figure 1: Top, Bottom and Side View

	Because of its weight and to reduce the soldering cycles, we recommend populating the SOM on the assembly side of the carrier board with the SOM's assembly side facing upwards.

© PHYTEC Messtechnik GmbH 2019

2 Delivery Format

The modules are shipped in 56 mm tapes with a feed of 48 mm (outer reel diameter: 33 cm). 175 pieces are on one reel and 10 slots are empty to enable mounting on a tape feeder.

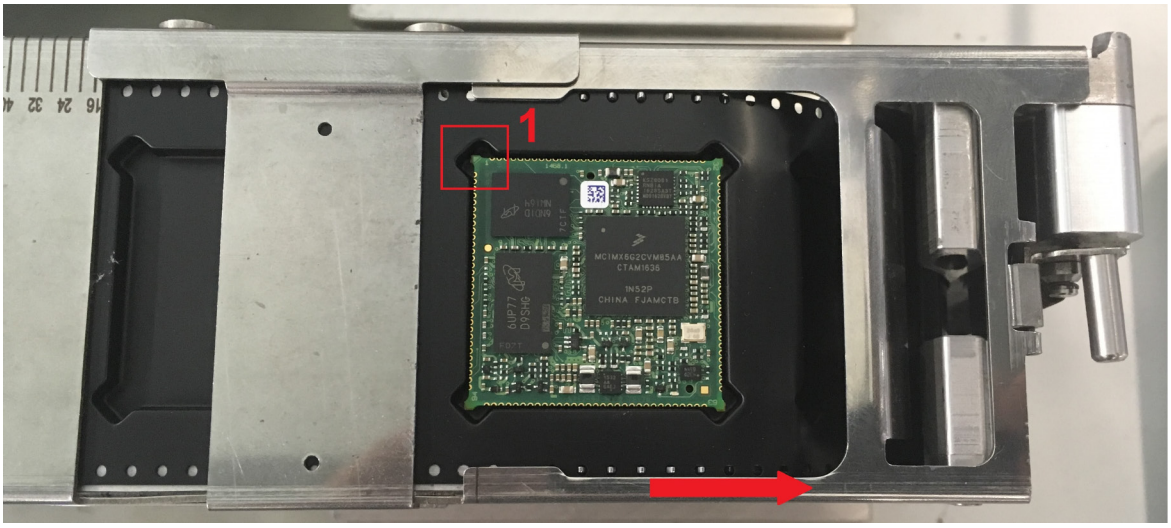

Figure 2: Location of Pin1

All other dimensions and tolerances as per EIA 481 standard.

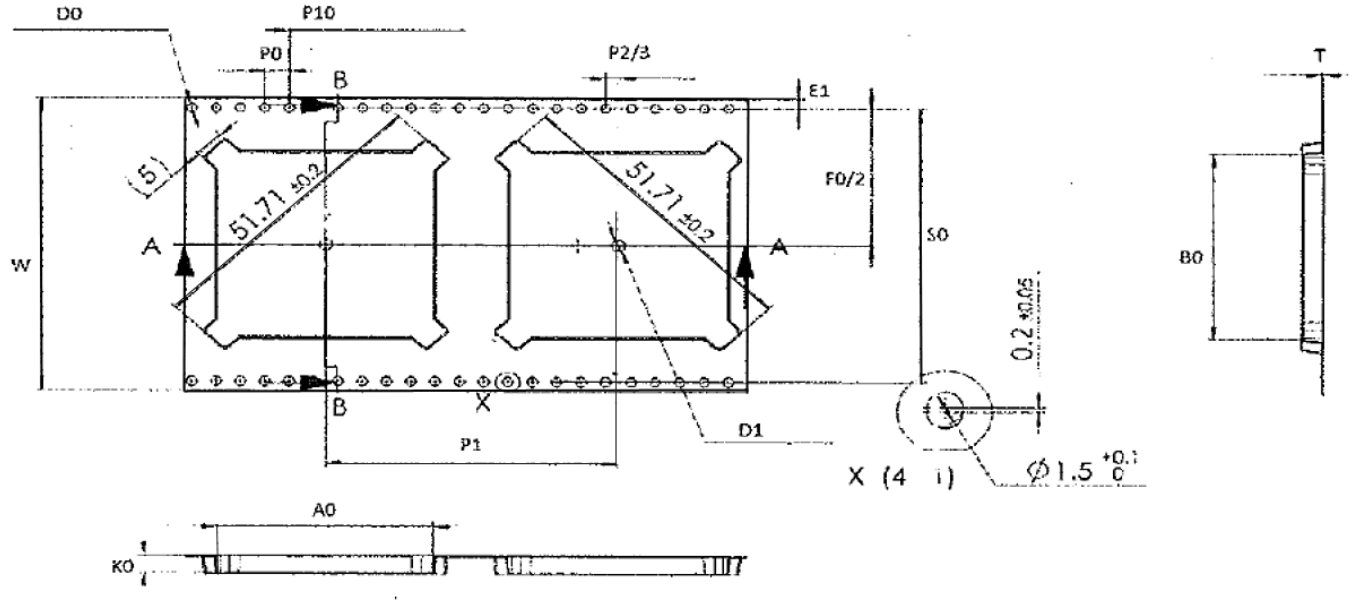

Figure 3: Tape Dimensions in mm

A_0	=	35.50 ± 0.20
B_0	=	35.50 ± 0.20
K_0	=	3.30 ± 0.20
P_1	=	48.00 ± 0.10
W	=	56.00 ± 0.30
t	=	0.30 ± 0.05

© PHYTEC Messtechnik GmbH 2019

3 Production Settings

The modules are rated MSL 3, which means storing them requires adequately before soldering (see IPC/JEDEC J-STD-033C). Store the modules shrink-wrapped in the original packing or, if the packing is opened, store them in a humidity reduced storage area (rel. humidity < 10%, T < 30°C / 86°F). The shelf life in sealed packaging is 12 months at < 40°C and < 90 % rel. humidity.

3.1 Paste Printing

For paste printing, PHYTEC recommends at least a 120 µm stencil without pad reduction. We use type 4 paste. If you want to have more solder paste, it is possible to overprint the pad away from the SOM by a maximum of 0,5mm.

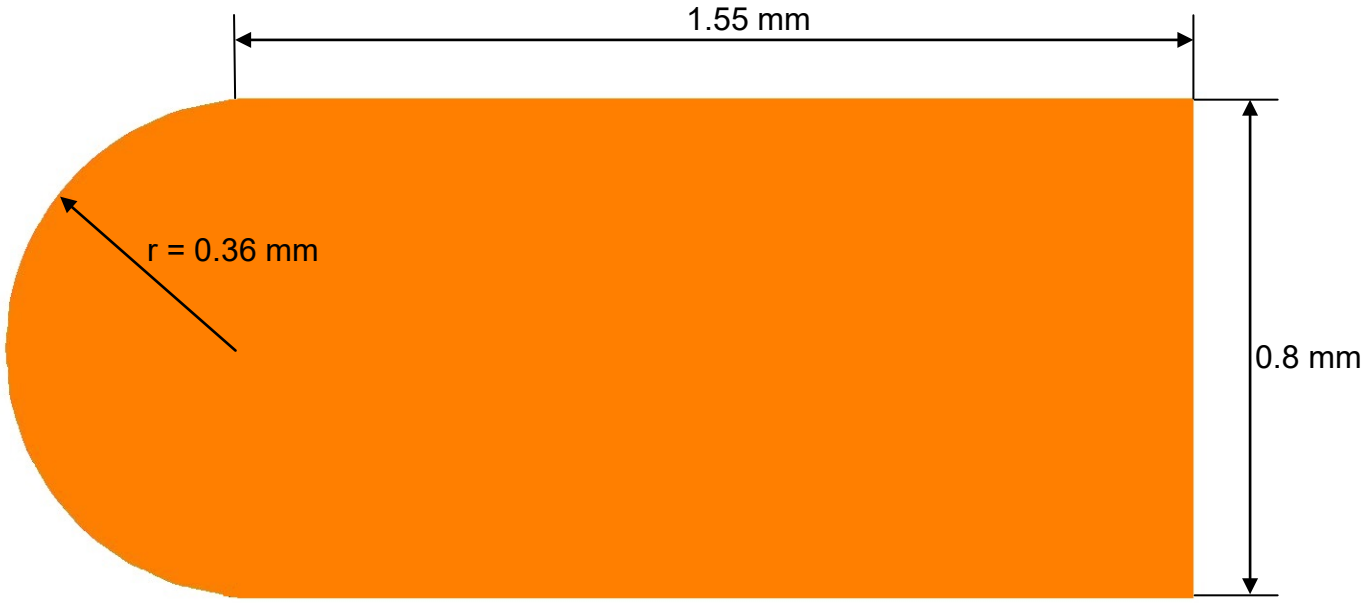

Figure 4: Paste Printing (orange) without Paste Reduction

A_0	=	35.50 ± 0.20
B_0	=	35.50 ± 0.20
K_0	=	3.30 ± 0.20
P_1	=	48.00 ± 0.10
W	=	56.00 ± 0.30
t	=	0.30 ± 0.05

3.2 Placement

For accuracy, the modules have to be placed with a placement machine. Pin 1 is in the corner of the NAND Flash (green marker). With the fix camera of the placement machine, check the fiducial points on the bottom of the SOM. Pin 1 is marked with only 3 fiducial points instead of 4, as can be seen in *Figure 1*.

The nozzle has to be able to pick up at least 6 grams. We pick the SOM with a Samsung CP45 TN110 nozzle in the middle of the module and place the module last on the PCB.

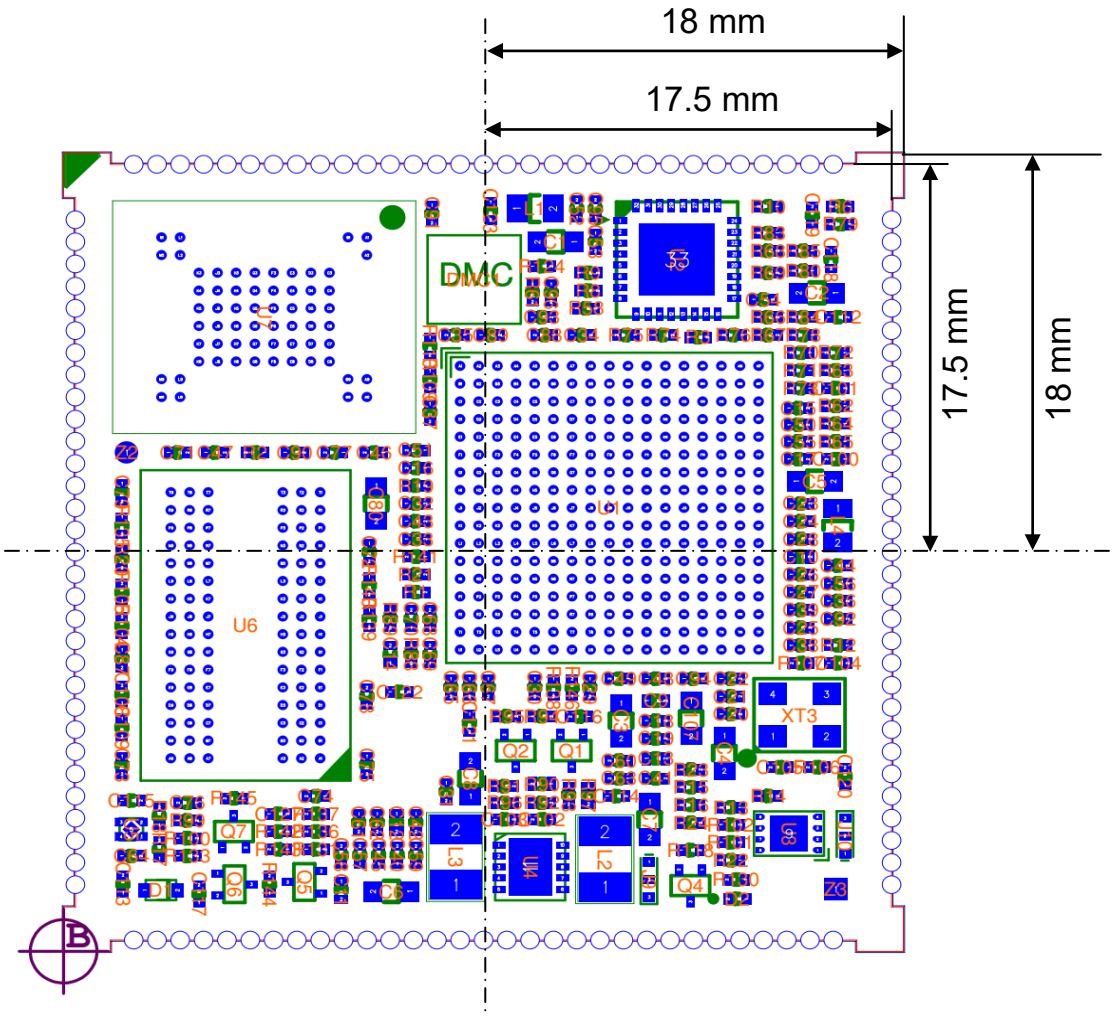

Figure 5: Dimensions of the Module

The link *phyCORE-i.MX 6UL/ULL* within the category *Dimensioned Drawing* on the phyCORE-i.MX 6UL/ULL download page (http://www.phytec.de/produkt/system-on-modules/phycore-imx-6ul-download/) leads to the layout data. It is available in different file formats. Use of this data helps with integrating the phyCORE-i.MX 6UL/ULL SOM as a single component into your design.

© PHYTEC Messtechnik GmbH 2019

3.3 Soldering

PHYTEC soldering profiles for vapor phase soldering is based on J-STD-020E (see below). The liquidus time is between 60 s and 90 s, and we recommend a maximum of three soldering processes. The peak body temperature of the populated parts is 260°C.

Classification Profile (J-STD-020E[1], Table 5-2, Page 8):

Profile Feature	Pb-Free Assembly
Preheat/Soak Temperature Min (Tsmin) Temperature Max (Tsmax) Time (ts) from (Tsmin to Tsmax)	150 °C 200 °C 60-120 seconds
Ramp-up rate (TL to Tp)	3 °C/second max.
Liquidus temperature (TL) Time (tL) maintained above TL	217 °C 60-150 seconds
Peak package body temperature (Tp)	For users, Tp must not exceed the Classification temp in Table 4-2. For suppliers, Tp must equal or exceed the Classification temp in Table 4-2.
Time (tp)* within 5 °C of the specified classification temperature (Tc), see Figure 5-1.	30* seconds
Ramp-down rate (Tp to TL)	6 °C/second max.
Time 25 °C to peak temperature	8 minutes max.

Note 1: All temperatures refer to the center of the package, measured on the package body surface (facing up during assembly reflow) (e.g., live-bug). If parts are reflowed in other than the normal live bug assembly reflow orientation (i.e., dead-bug), Tp **must** be within ±2°C of the livebug Tp and still meet the Tc requirements, otherwise, the profile **must** be adjusted to achieve the latter. To accurately measure actual peak package body temperatures, refer to JEP140 for recommended thermocouple use.

Note 2: Reflow profiles in this document are for classification/preconditioning and are not meant to specify board assembly profiles. Actual board assembly profiles should be developed based on specific process needs and board designs and should not exceed the parameters in this table.
For example, if Tc is 260 °C and time Tp is 30 seconds, this means the following for the supplier and the user:

- For a supplier: The peak temperature must be at least 260 °C. The time above 255 °C must be at least 30 seconds.
- For a user: The peak temperature must not exceed 260 °C. The time above 255 °C must not exceed 30 seconds.

Note 3: All components in the test load **must** meet the classification profile requirements.

Note 4: SMD packages classified to a given moisture sensitivity level by using Procedures or Criteria defined within any previous version of J-STD-020, JESD22-A112 (rescinded), IPC-SM-786 (rescinded) do not need to be reclassified to the current revision unless a change in classification level or a higher peak classification temperature is desired.

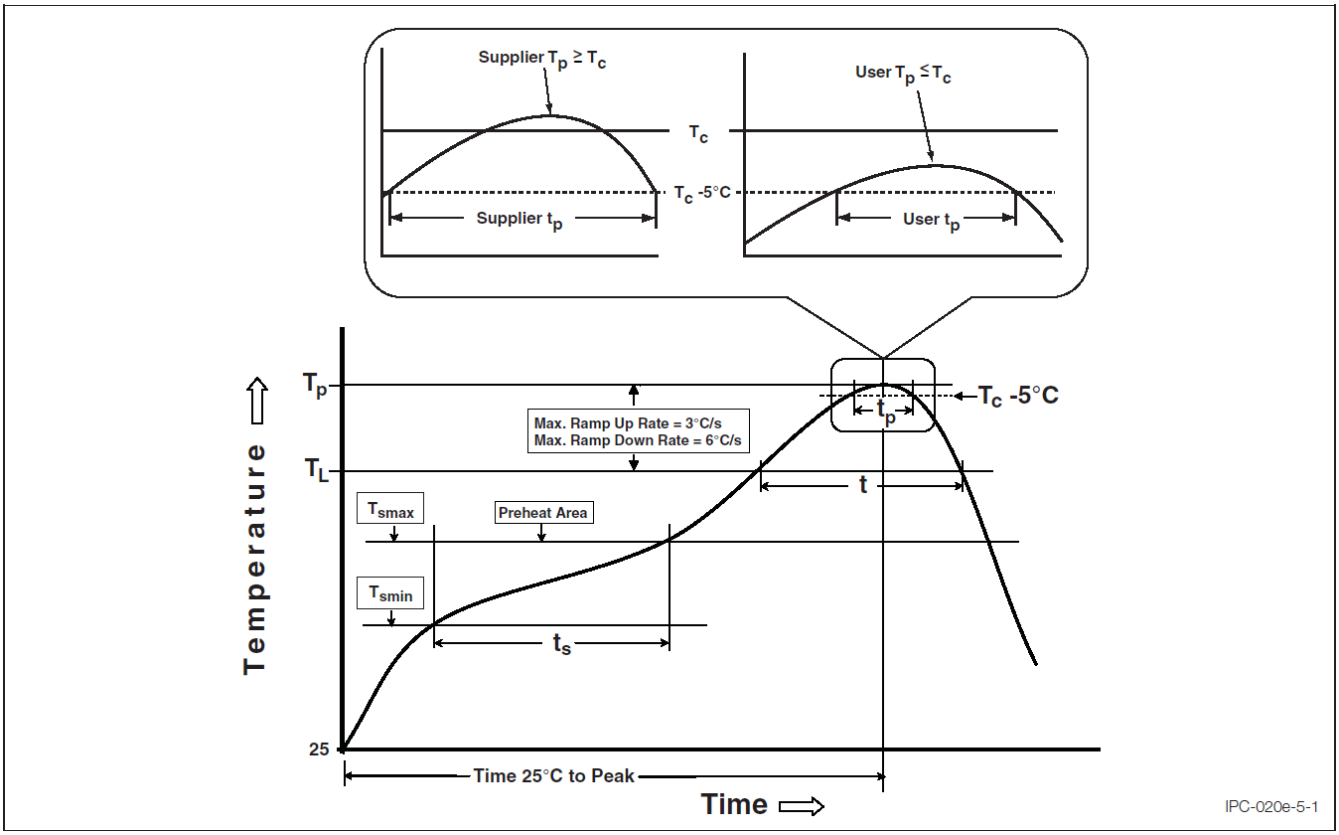

Figure 6: Classification Profile (J-STD-020E[1], Figure 5-1, Page 8)

Please contact our technical support, if you need additional information or if you have any questions.

Europe (except France):	**France:**
▪ +49 6131 9221-31	▪ +33 2 43 29 22 33
▪ *support@phytec.de*	▪ *support@phytec.fr*
North America:	**India:**
▪ +1 206 780-9047	▪ +91-80-4086 7047/50
▪ *support@phytec.com*	▪ *support@phytec.in*
China:	
▪ +86-755-6180-2110	
▪ support@phytec.cn	

1: Revision December 2014

© PHYTEC Messtechnik GmbH 2019